PC EXHIBIT E

CINEMARK

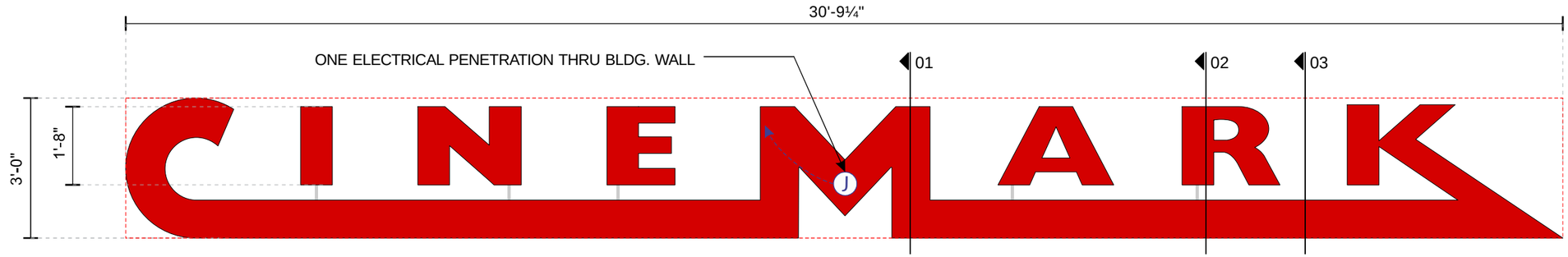

Sign Location

Parking Garage Sign #2

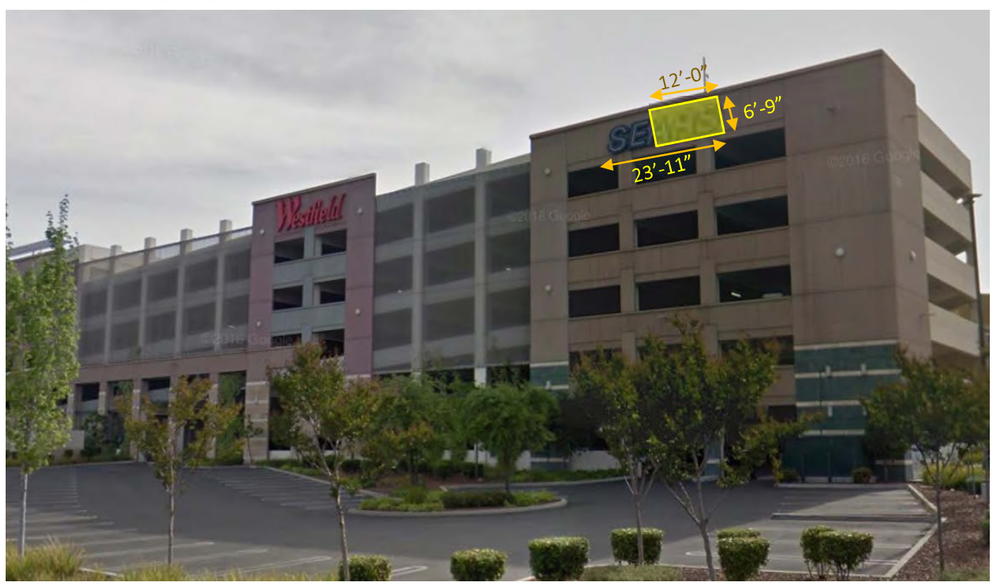

BEFORE

N.T.S.

G CM-3.0 SELF-CONTAINED FACE LIT CHANNEL LETTERS

SCALE: 3/8"=1'-0"

ONE (1) REQUIRED - MANUFACTURE AND INSTALL

92.32 SQ. FT

MAIN PRIMARY POWER FROM BLDG. WILL FEED THRU THE CENTER OF THE "M" - ONE ELECTRICAL PENETRATION THRU ELEVATION WALL

L.E.D. LOW VOLTAGE POWER SUPPLIES TO BE LOCATED INSIDE LETTERS - PRIMARY ELECTRICAL POWER FOR THE "I", "N", "E", "A", "R" WILL FEED UP FROM THE MAIN "C-M-K" PART OF THE SIGN, THRU RIGID EMT CONDUIT PAINTED TO MATCH BUILDING - **COLOR T.B.D.**

SEE SECTION DETAILS IN RED SECTION PAGE

80'-0" +/- PER GOOGLE EARTH

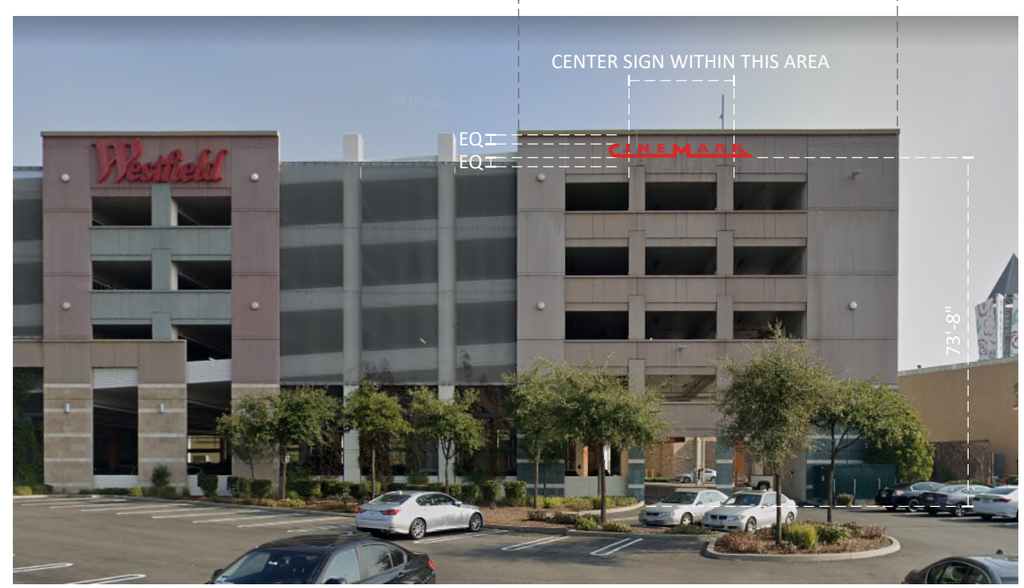

AFTER

SCALE 1/32" = 1'-0"

TITLE 24 COMPLIANT
State of California

FINAL ELECTRICAL CONNECTION BY CUSTOMER

THIS SIGN IS INTENDED TO BE INSTALLED IN ACCORDANCE WITH ARTICLE 600 OF THE NATIONAL ELECTRICAL CODE AND/OR OTHER APPLICABLE LOCAL CODES. THIS INCLUDES PROPER GROUNDING & BONDING OF THE SIGN. SIGN WILL BEAR UL LABEL(S).

Design #	
0618522AR12 PERMIT	
Sheet	14 of 15
Client	
Cinemark USA, Inc.	
Address	
1191 GALLERIA BLVD. ROSEVILLE, CA 95678	
Acct. Rep. Coordinator	DEBBIE MOLTZ LAUREN STACKHOUSE
Designer	IH
Date	4/23/19
Approval / Date	
Client	
Sales	
Estimating	
Art	
Engineering	
Landlord	

Revision/Date

R15-7-15SH: Sign A – please show the blue cans and white outline on the "Century Theatres" faces. B – I cabinet two reds on LUCentury faces as is. C12 – Please change letters to white acrylic faces. D – please add a small red Cinemark over 3D and move them closer to the blade sign per detail below. E – change the poster case dimension to 5' wide x 8' tall

R01/2-9-15SH: Add the wayfinding and garage signs to our package

R02/12-19-15SH – Change F1-F9 to just "Century" without Theatres.
- Change G & H to bead face cabinets without retainers and paint the cabinet returns red to match the faces.
- Update elevations & plans to provide electrical & attachment details and requirements for the sign. Add a note stating to rough in electrical so we need the set of plans updated for the site meeting for doubtful.
CORRECTION(1-10-2292): SIGN "D" & "H" RED RETURNS

R4/1-27-2SH – Add site plan, wall sections, and details from shell drawings - Add Abel's meeting notes & redlines to the drawings.
Sign A&B will have remote power supplies - pre-wiring not required.
Add details for the ACM background behind sign C. Pre-drilling required.
Sign D will have 3 leads dropped with power supplies above drop ceiling. Show this on a sdetaection detail for j-box placement. Pre-wiring not required.delete "E" and just show the dimensionsquantity on the elevations. Add barrier on frame sign instead.

R5/2/5/20UGZ: Rebrand to Cinemark.

R6/2-14-20SH: Revise signs G & H to individual "CINEMARK" channel letters rather than cabinets. Use the square footage from the original allowable area where Sears was located.
Delete postersecion 1 & 2 shown on the elevations on page 3 altogether. Re-number the postersection 3 to be 1 and move it closer to the blade sign per the elevations on page 3.
Update the notes for sign A to have this sign be self-contained power supplies like the standard construction for this sign. Delete note about remote power supplies and low voltage penetrations.
Add 22" +/- wide CinéMark logo with white formed faces and white returns inside at the mall entry

2-21-20SH: CHANGE SIGNS G AND I TO BE SELF CONTAINED PER RED TAG FROM DALLAS

R7/2-28-20SH: Delete sign B. Re-letter - Show location of sign H on an aerial map or site plan.

R8/2-28-20SH – Delete sign D, re-letter. The section on page 17 is for sign B, so it needs to be moved up in the package to page 7 and we need to be sure we have a section noted with specs for sign H.

4-6-20 R: do not change R8 - Add weights for the individual letters on signs C1, C2, and the small CinéMark letters on D for permitting. They should be under 100 lbs which allows us to avoid getting stamped engineering.

R9/4-28-20SH: the gas line was relocated inside the building so we no longer have a conflict with the RD sign. Delete notes on page 3 & page 9. Delete page 10

4-27-20 PERMIT: Changes per city requirements.

R10 PERMIT: 6-7-20SH – On sign D, delete "Cinemark" letters & reduce the X to 12"
- Reduce E to 14' x 20'

- Reduce E to 14' x 20'

R11/8-14-20SH: Reduce sign E from 280 square feet to 140 square feet proportionately. Show it lower than center on the wall. Show light fixtures by GC above the poster. Be sure the scale on the main elevation & also the detail sheet for sign E are both updated with the new size.

R12/8-21-20SH: Change banner to 12' x 12'

CHANDLER SIGNS

chandlersigns.com

National Headquarters	14201 Sovereign Road #101 Fort Worth, TX 76155 (214) 902-2000 Fax (214) 902-2044
San Antonio	17319 San Pedro Ave Ste 200 San Antonio, TX 78232 (210) 349-3804 Fax (210) 349-8724
West Coast	3220 Executive Ridge Dr Ste 250 Vista, CA 92081 (760) 734-1708 Fax (760) 734-3752
Northeast US	2301 River Road Suite 201 Louisville, KY 40206 (502) 897-9800 Cell (502) 554-2575
Florida	2584 Sand Hill Point Circle Davenport, FL 33837 (863) 420-1100 Fax (863) 424-1160
Georgia	111 Woodstone Place Dawsonville, GA 30534 (678) 725-8852 Fax (210) 349-8724
South Texas	PO BOX 125 206 Doral Drive Portland, TX 78374 (361) 563-5599 Fax (361) 643-6533

This drawing is the property of Chandler Signs, LLC
All rights to its use for reproduction are reserved by Chandler Signs, LLC

RED FACE SECTION

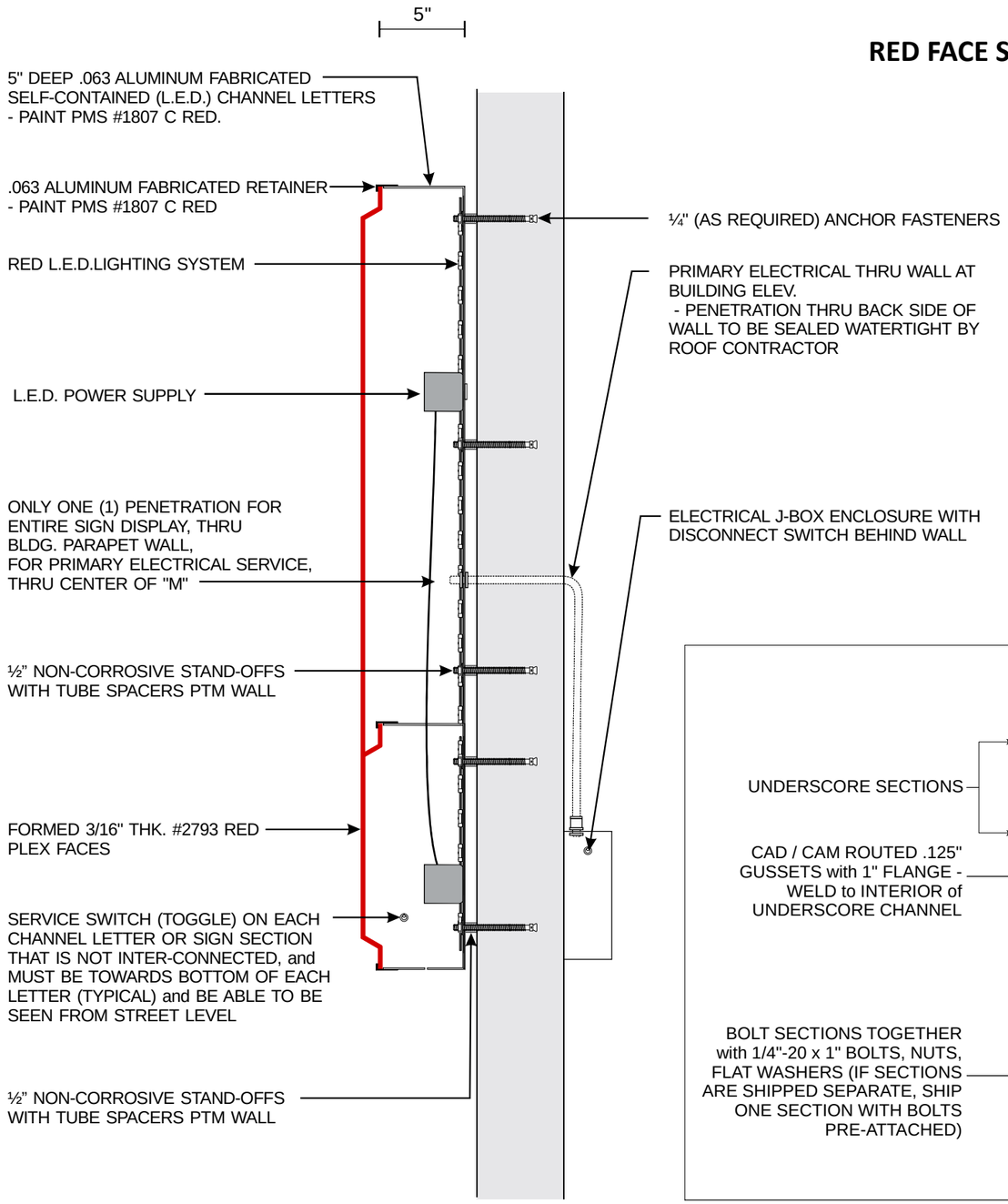

01 SECTION DETAIL N.T.S.

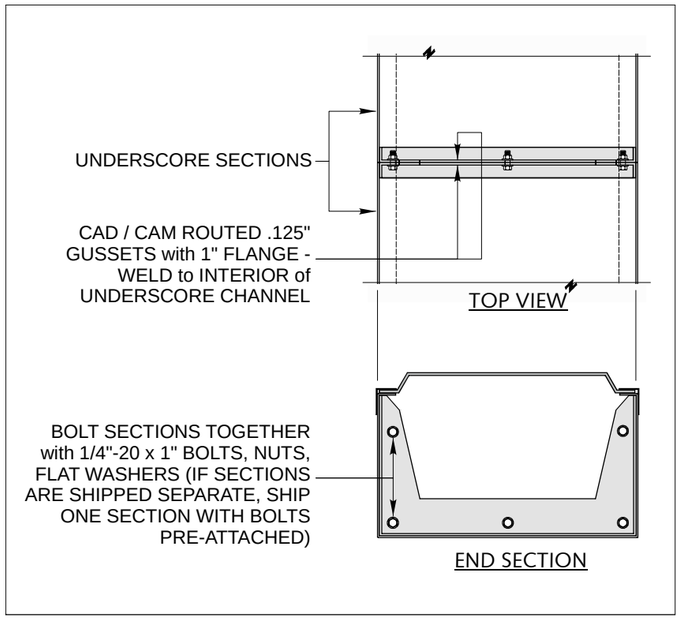

03 "UNDERSCORE" DETAIL N.T.S.

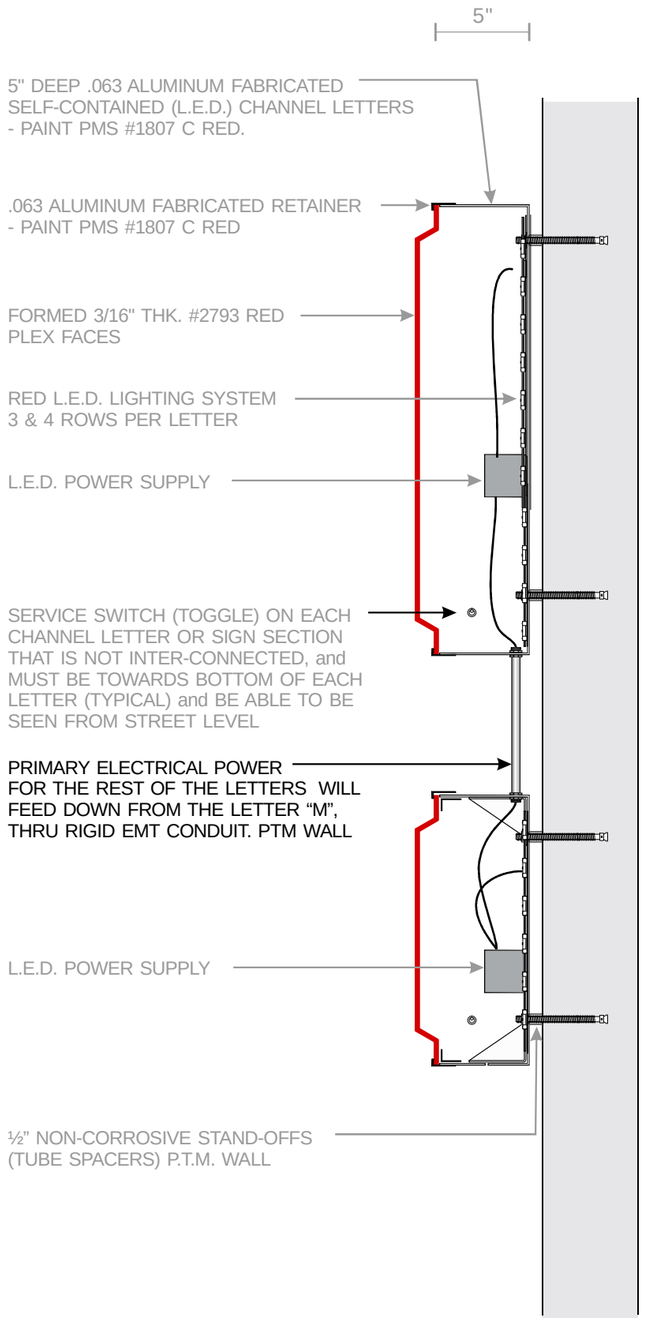

02 SECTION DETAIL N.T.S.

CINEMARK

Design #	
0618522AR12 PERMIT	
Sheet	15 of 15
Client	
Cinemark USA, Inc.	
Address	
1191 GALLERIA BLVD. ROSEVILLE, CA 95678	
Acct. Rep. Coordinator	DEBBIE MOLTZ LAUREN STACKHOUSE
Designer	IH
Date	4/23/19
Approval / Date	
Client	
Sales	
Estimating	
Art	
Engineering	
Landlord	

Revision/Date

R15-7-15SH: Sign A – please show the blue cans and white outline on the "Century Theatres" faces. B – I cabinet two reds on LU,Century faces as is. C12 – Please change letters to white acrylic faces. D – please add a small red Cinemark over 3D and move them closer to the blade sign per detail below. E – change the poster case dimension to 5' wide x 8' tall

R21/2-8-15SH: Add the wayfinding and garage signs to our package

R22/12-15SH – Change F1-F5 to just "Century" without Theatres.
- Change G & H to bead face cabinets without retainers and paint the cabinet returns red to match the faces.
- Update elevations & plans to provide electrical & attachment details and requirements for the AC. They are ready to rough in electrical so we need the set of plans updated for the site meeting for Abel/Eli.
CORRECTIONS 1-10-23SD: SIGN 10" & 14" RED RETURNS

R4/1-27-20SH – Add site plan, wall sections, and details from shell drawings - Add Abel's meeting notes & redlines to the drawing
Sign A/B will have remote power supplies - pre-wiring not required.
Sign C will have 3 leads dropped with power supplies above drop ceiling - pre-wiring not required.
Sign D will have 3 leads dropped with power supplies above drop ceiling. Show this on a sidesection detail for j-box placement. Pre-wiring not required.delete "E" and just show the dimensions/quantity on the elevations. Add banner on frame sign instead.

R6/25/20JUGZ: Rebrand to Cinemark.

R8/2-14-20SH: Revise signs G & H to individual "CINEMARK" channel letters rather than cabinets. Use the square footage from the original allowable area where Sears was located.
Delete posterceses 1 & 2 shown on the elevations on page 3 altogether. Re-number the posterceses 3 & 4 to 1 & 2 and show them on the elevations on page 3 instead.
Update the notes for sign A to have this sign be self-contained power supplies like the standard construction for this sign. Delete note about remote power supplies and low voltage penetrations.
Add 20" +/- wide CinemArk logo with white formed faces and white returns inside at the mall entry

2-21-20SH: CHANGE SIGNS G AND I TO BE SELF CONTAINED PER RED TAG FROM DALLAS

R7/2-28-20SH: Delete sign B. Re-letter - Show location of sign H on an aerial map or site plan.

R8/2-28-20SH – Delete sign D, re-letter. The section on page 17 is for sign B, so it needs to be moved up in the package to page 7 and we need to be sure we have a section noted with specs for sign H.

4-6-20 R: do not change R8 : Add weights for the individual letters on signs C1, C2, and the small CinemArk letters on D for permitting. They should be under 100 lbs which allows us to avoid getting stamped engineering.

R9/4-28-20SH: the gas line was relocated inside the building so we no longer have a conflict with the RD sign. Delete notes on page 3 & page 9. Delete page 10

4-27-20 PERMIT: Changes per city requirements.

R10 PERMIT 6-7-20SH – On sign D, delete "Cinemark" letters & reduce the X to 12"
- Reduce E to 14' x 20'

- Reduce E to 14' x 20'

R11/8-14-20SH: Reduce sign E from 280 square feet to 140 square feet proportionately. Show it lower than center on the wall. Show light fixtures by GC above the poster. Be sure the scale on the main elevation & also the detail sheet for sign E are both updated with the new size.

R12/8-21-20SH: Change banner to 12' x 12'

CHANDLER SIGNS

chandlersigns.com

National Headquarters	14201 Sovereign Road #101 Fort Worth, TX 76155 (214) 902-2000 Fax (214) 902-2044
San Antonio	17319 San Pedro Ave Ste 200 San Antonio, TX 78232 (210) 349-3804 Fax (210) 349-8724
West Coast	3220 Executive Ridge Dr Ste 250 Vista, CA 92081 (760) 734-1708 Fax (760) 734-3752
Northeast US	2301 River Road Suite 201 Louisville, KY 40206 (502) 897-9800 Cell (502) 554-2575
Florida	2584 Sand Hill Point Circle Davenport, FL 33837 (863) 420-1100 Fax (863) 424-1160
Georgia	111 Woodstone Place Dawsonville, GA 30534 (678) 725-8852 Fax (210) 349-8724
South Texas	PO BOX 125 206 Doral Drive Portland, TX 78374 (361) 563-5599 Fax (361) 643-6533

This drawing is the property of Chandler Signs, LLC
All rights to its use for reproduction are reserved by Chandler Signs, LLC

TITLE 24 COMPLIANT
State of California

FINAL ELECTRICAL CONNECTION BY CUSTOMER

THIS SIGN IS INTENDED TO BE INSTALLED IN ACCORDANCE WITH ARTICLE 600 OF THE NATIONAL ELECTRICAL CODE AND/OR OTHER APPLICABLE LOCAL CODES. THIS INCLUDES PROPER GROUNDING & BONDING OF THE SIGN. SIGN WILL BEAR UL LABEL(S).